JK Fenner

SMSR_HD Plus Series

Installation & Maintenance

Shaft Mounted Gearbox

ENGINEERING MOTION FOR BETTER TOMORROW

INSTRUCTIONS

1. Ensure that gearbox bore & the shaft on to which the gearbox is to be mounted are clean and free from burrs. Liberally smear the input shaft and gearbox bore with a good grade grease / rust preventive oil. This acts as a lubricant to aid mounting and facilitates easy removal by prevention of atmospheric corrosion. If corrosion sets-in, the shaft might have to be cut to remove SMSR for maintenance.

2. Slide reducer on to the driven shaft which must pass through its full WIDTH. DO NOT USE TAPER OR TOP FITTING KEYS. Tighten both screws in line with hub keyway. See Fig.1 for mounting details.

3. Install pulley on Input shaft as close to the reducer as possible. (See Fig.1)

4. Install motor and V-Belt drive with the belt pull at approximately 90 degree to the centre line between driven and input shafts. See Fig.2 This will permit tensioning of the V-Belt drive with the torque-arm which should preferably be in tension.

FIG 1

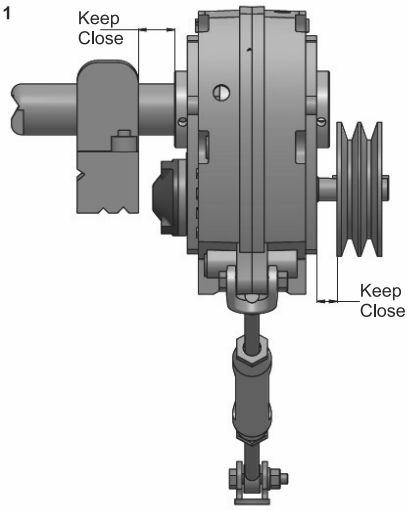

FIG.2

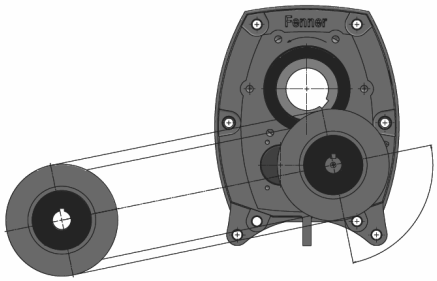

V-Belt drive may be located to right, if desired

The V-Belt drive may be located in any convenient position. If the Torque-Arm is to be used to tighten the belts, the drive should be about 90° to line between the input and output shafts

INSTRUCTIONS

5. Install Torque-arm on gearbox by removing the appropriate case bolt. Reft the case bolt after installing the Torque-arm.

6. Install torque-arm fulcrum on a rigid support so that the torque-arm will be at approximately right angles to the centre line through the driven shaft and the torque-arm case bolt. See Fig.3. Make sure there is sufficient take up in the turn buckle for belt tension adjustment.

FIG.3

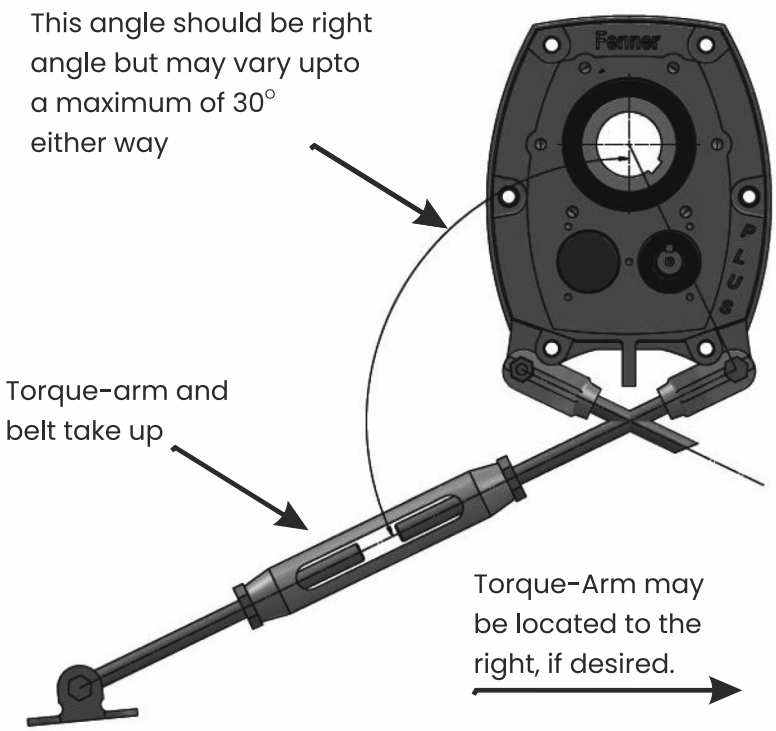

7. Adjust Belt tension correct using JK Fenner belt tension indicator

LUBRICANTS

IMPORTANT

The gearbox is despatched without oil, only residual oil after testing might be present. It must be filled as instructed before running, use high grade oil as shown on lubrication chart attached to breather plug or alternative grades stated in Page 5. Fill to level Plug ◒ When reducer is not running. Drain, flush and refill every six months of operation, check oil level regularly. Position of filler breather and drain plug for different Mounting Positions are shown in Fig.4.

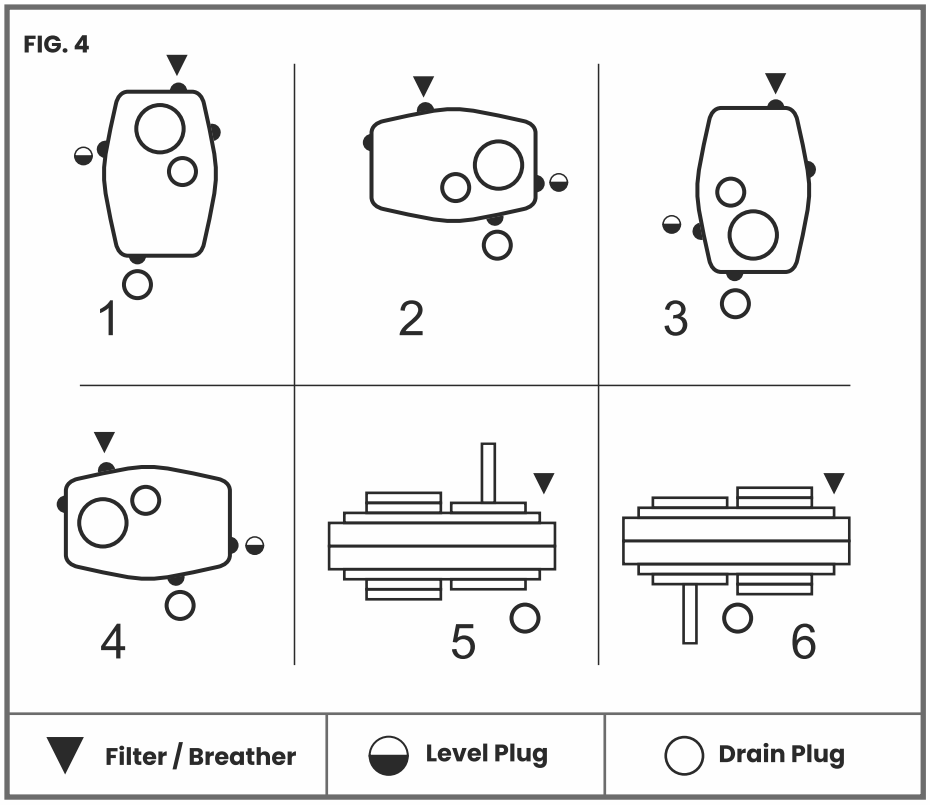

CAUTION

Too much oil will cause over heating. Too little oil will cause gear failure.

Table : 11-08 Recommended Lubricants

	Ambient Temp °C	13:1 & 20:1 RATIO GEAR BOXES			5:1 RATIO GEAR BOX			
		0-20 Rev/min	21-50 Rev/min	51-120 Rev/min	0-100 Rev/min	101-200 Rev/min	201-400 Rev/min	
		BCDEFGHJ	BCDEFGHJ	BCDEFGHJ	BCDEFGHJ	BCDEFGHJ	BCD	EFGHJ
Bharat Petroleum (Amocam)	-10 to +5	150	150	150	100	100	100	100
	6 to 25	460	460	460	460	320	320	460
	26 to 40	460	460	460	460	460	460	460
IndianOil (Servomesh)	-10 to +5	SP 150	SP 150	SP 150	SP 100	SP 100	SP 100	SP 100
	6 to 25	SP 460	SP 460	SP 460	SP 460	SP 320	SP 320	SP 460
	26 to 40	SP 460	SP 460	SP 460	SP 460	SP 460	SP 460	SP 460

Table : 11-09 Mounting Position-Oil Quantities (Litres)

Unit Size	Approximate Capacity - Litres											
	Mounting Position											
	20 : 1 & 13 : 1						05 : 1					
	1	2	3	4	5	6	1	2	3	4	5	6
B	0.25	0.4	0.3	0.4	0.6	0.6	0.3	0.3	0.3	1.4	0.6	0.6
C	0.4	0.6	0.5	0.6	1.0	0.96	0.5	0.5	0.5	0.6	1.0	0.96
D	0.7	0.9	0.8	0.9	1.4	1.44	0.8	0.9	0.8	1.0	1.6	1.44
E	1.0	1.8	1.4	1.6	2.6	2.6	1.2	1.7	1.4	1.8	2.9	2.6
F	2.3	2.6	2.4	2.2	3.5	3.5	2.5	2.6	2.4	2.5	4.0	3.5
G	3.0	3.2	3.2	3.3	5.3	5.3	3.2	3.2	3.2	3.3	5.3	5.3
H	3.8	5.5	4.2	5.1	8.2	8.2	4.1	5.3	4.1	5.8	9.3	8.2
J	5.4	8.5	5.9	8.3	13.3	13.3	5.7	8.6	5.9	8.6	13.8	13.3

Capacities shown are approximate

Normal operating positions are shown Fig.4. Note that the gearbox is supplied with four plugs. After the gearbox has been mounted in its running position the plugs must be located as shown in Fig.4 for the appropriate mounting position. If the gearbox is not with in 20 degree of one the position shown, the oil level plug can not be safely used to check the oil level. This can be overcome by disconnecting the torque-arm and adjusting the gearbox around to one of the positions shown.

As there are many positions in the gearbox, it may be necessary or desirable to make special adaptations using the plug holes in the gearbox with standard pipe fittings. stand pipes or oil level gauges.

RENEWING THE LUBRICANT

Note: A gear units first filling of lubrication should be changed after 500 hours to remove any loose material produced during the bedding-in of the gears.

Subsequent oil changes will depend upon the working conditions, giving consideration both to the loading of the gear unit and also to the environment where the unit is located. For example a dust laden atmosphere would require frequent monitoring and oil changes. As a guide, it is recommended to change the lubrication at 12 monthly intervals, under normal running conditions. Regular lubricant changes are essential to maintain the efficiency of the gear unit. If there is any doubt, then please contact your oil supplier. All major suppliers of lubricants offer a free advisory service.

JK Fenner

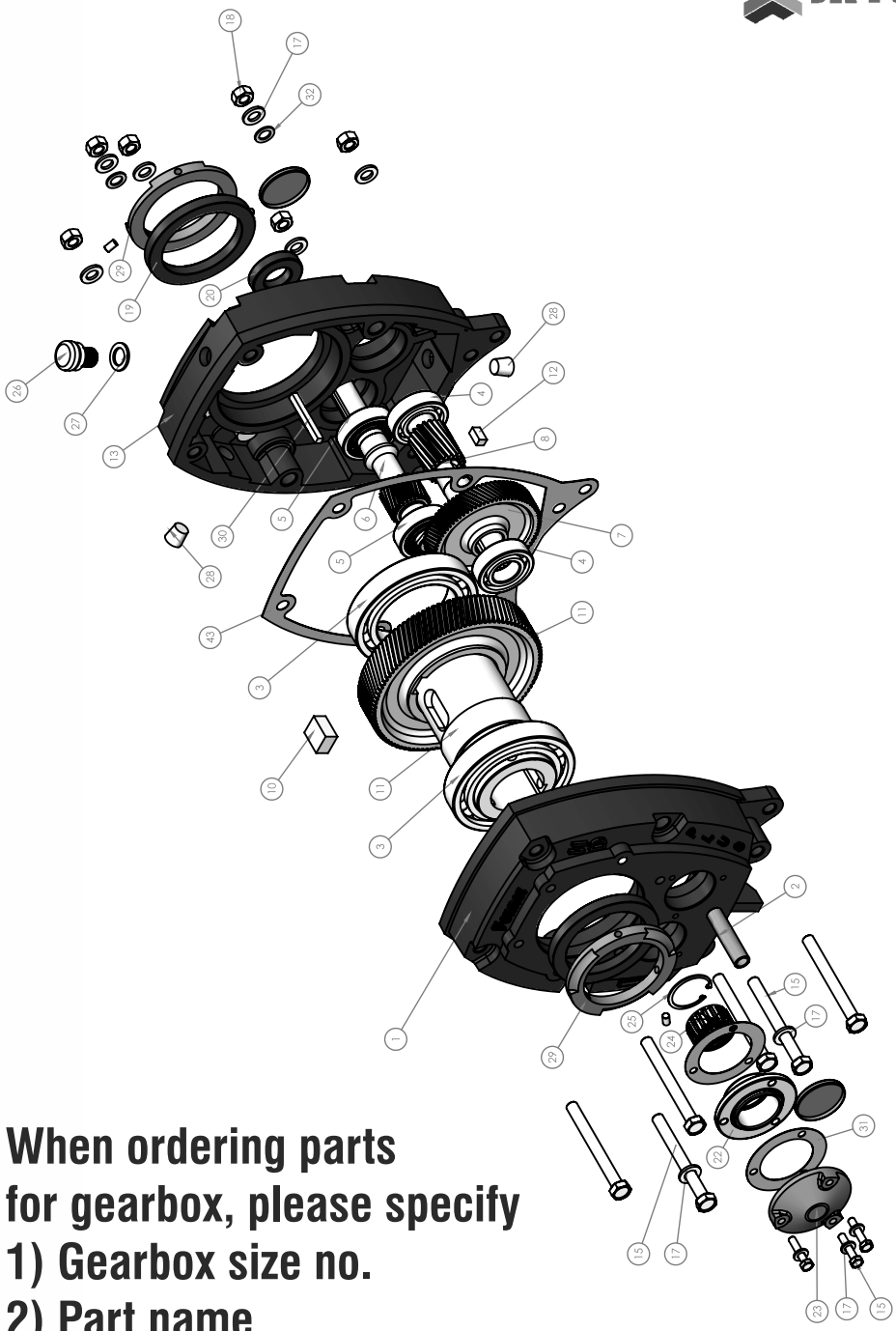

When ordering parts for gearbox, please specify

1) Gearbox size no.

2) Part name

3) Quantity

JK Fenner

INDIVIDUAL PARTS

ITEM NO.	DESCRIPTION	QTY.
1	Case, half-LH	1
2	Hollow Dowel	2
3	Output Hub Bearing	2
4	Intormodiato Shaft Bearing	2
5	Input Shaft Bearing 2	
6	Input Shaft (20:1,13:1,5:1)	1
7	1st Reduction Gear (20:1, 13:1)	1
8	Intermediate:, Pinion (20:1,13:1,5:1)	1
9	Output Hub (Standard Alternative)	1
10	Output Hub key	1
11	2nd Reduction Gear (20:1,13:1)	1
12	1st Reduction Gear Key	1
13	Case Half -RH	1
14	Case Bolt	6
15	Case Bolt	3
16	Spring Washer	8
17	Spring Washer	3
18	Case Nut	6
19	Output Hub Oil seal	2
20	Input Shaft Oil Sear (20:1,13:1)	1
21	Intermediate Cover	2
22	Backs top Cone	1
23	Backs top Cover	1
24	Sprag Wheel	1
25	Circlip	1
26	Breather Plug	1
27	Rubber washer	1
28	Pipe Plug	2
29	Output Collar	2
30	Input Shaft key	1
31	Gasket	2
32	Spring Washer	2
33	Grub Screw	6
34	Rod End & Extension-1	1
35	Turn Buckle	1
36	Rod End & Extension	1
37	Fulcrum	1
38	Fulcrum Bolt	1
39	Hex. Bolt	1
40	Nut	2
41	Rod End Lock Nut	2
42	Spring Washer	1
43	Gasket	1

REPLACEMENT OF PARTS

REMOVING GEARBOX FROM SHAFT

Loosen screws in both output hub collars. Remove the collar next to end of shaft turn the collar and replace with the flush side outwards. Replace and tighten screws fully and then slacken off slightly in order to have maximum engagement in the hub but not gripping the shaft. Using any suitable three legged hub drawer engage the feet recesses of the collar and remove the gearbox by screwing down on the shaft.

IMPORTANT

Using tools normally found in the maintenance department. the gearbox can be dismantled and reassembled. Cleanliness. it is very important to prevent the ingress of dirt into the bearings and other parts of the gearbox. A tank of clean solvent, an arbor press and equipment for heating bearings and gears should be available for shrinking these parts on the shafts.

Rubbing type of oil seals are fitted and great care should be taken during dismantling and reassembling to avoid damage to the rubbing surfaces.

The key seat in the input shaft and the six holes in the output hub should be covered with sellotape or other suitable material. Any burrs on shaft or hub surfaces should be carefully removed before fitting seals.

We are prepared to repair reducers for customers who do not have proper facilities or who do for any reason desire factory service. An estimate of the cost will be sent after examination and before the repair is undertaken.

ORDERING PARTS

When ordering parts for a gearbox specify gearbox size, Serial No, Part Name, item number and quantity required.

It is strongly recommended that when a pinion or gear replaced the mating gear or pinion also to replaced. If the large gear on the output hub must be replaced, it is recommended that an output hub assembly of gear assembled on a hub be ordered to secure undamaged surfaces on the outer hub where the oil seals rub.

However, if it is desired to use the old output hub. press the gear and bearing off and examine the rubbing surfaces under the oilseal careful for possible scratching or other damage resulting from the pressing operation. To prevent oil leakage at the shaft oilseals, the smooth surface of the output hub must not be damaged.

If any part must be pressed from a shaft or from the output hub this should be done before ordering parts to make sure that none against the of the bearings or other parts are damaged on removal. Do not press against the outer case of any bearing. Because old shaft oil seals and gaskets may be damaged in dismantling, it is advisable to order replacements for these parts.

LONG TERM STORAGE (FROM 12 MONTHS UP TO 2 YEARS)

I. The location should be free from vibration, otherwise brinelling could take place, particularly between bearing rolling elements and raceways, leading to noisy operation and early failure in service.

   Wherever possible, the shafts of the unit should be rotated at least once a week, by hand if necessary, to prevent brine ling.

II. Apply Denso paste and tape to all external finish machined and unprotected surfaces, including shaft extensions, ensuring full coverage to lip of oil seal.

III. Completely fill the unit with oil, ensuring complete submersion of all internal components. When the unit is returned to service, drain and refill with new lubricant to the correct level. Gear units can be prepared by Fenner Gears for long term storage provided that this requirement is stipulated on the order before delivery. Gear units will not be filled with oil, therefore the interior of the unit would be sprayed with rust preventative oil.

Shaft Mounted Gearbox HD **Plus Series**

Backstops Installation - SMSR HD Plus If gearbox is filled with oil drain off oil before proceeding further

Step 1

Remove backstop cover and gasket ref 11 & 12 (individual parts)

Step 2

Determine direction of required shaft rotation

Sizes 'B' HD Plus to 'J' HD Plus

The Shaft is free to rotate in the direct on the arrow marked on the backstop cage If the opposite direction of rotation is required. remove the miserably and turn the sprag assembly through 180° reassemble

Step 3

Replace gasket ref 11 and 12

Step 4

Refill gearbox with correct grade of oil

IMPORTANT

When pressing the backstop Into the housing it is important to hammer the assembly at any time. The assembly may be tapped gently, if necessary.

The change the backstopping direction at any time. It is necessary to remove the swag assembly and turn it end for end. Two M3 tapped holes are provided to remove the outer race On size C no holes are provided; use two bent, pieces of wire to hook and withdrew the sprag, turn end for end and replace.

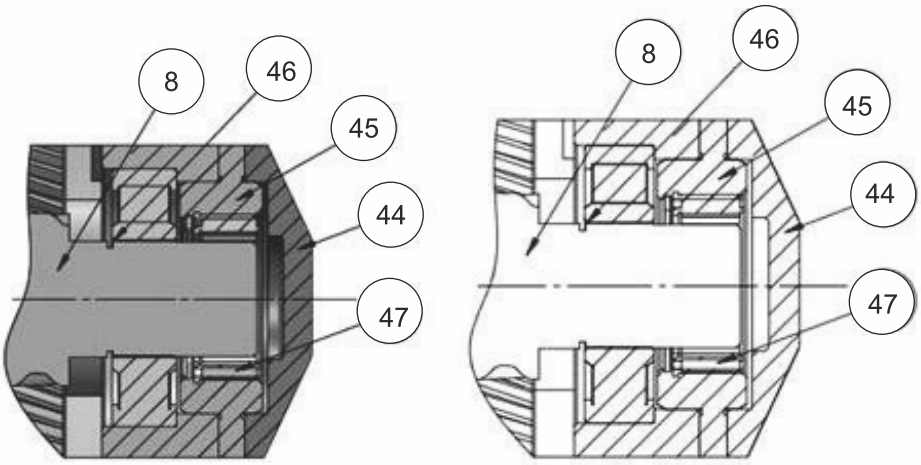

Sizes: B, C, D, E, F, G, H & J

Spare Part Ref. No	Description	No. Reqd.
44	Back stop Assembly	1
45	Back stop out bush	1
46	Back stop Circlip	1
47	Sprag wheel	1

Installation and Instruction Manual for SMSR_ HD plus Tapered Bushing Design (TBD) Assemblies

* These instructions must be read thoroughly before installing or operating this product.

WARNING: To ensure that drive is not unexpectedly started, turn off and lock out or tag power source before proceeding. Remove all external loads from drive before removing or servicing drive or accessories. Failure to observe these precautions could result in bodily injury.

BUSHING INSTALLATION

The SMSR Plus TBD is designed to fit both standard and undersized driven shafts. The Standard Taper Bushings series is designed where shaft length is not a concern. Taper Bushings can also be used for undersized shafts upto 60 microns.

The SMSR Plus TBD is designed to fit both standard and undersized driven shafts. The Standard Taper Bushings series is designed where shaft length is not a concern. Taper Bushings can also be used for undersized shafts upto 60 microns.

Standard Taper Bushings

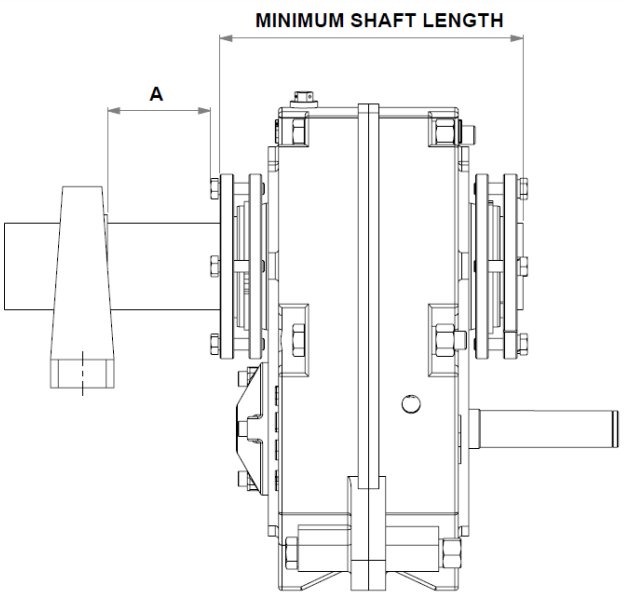

Figure 1 - Minimum Recommended Dimensions

WARNING: Because of the possible danger to person(s) or property from accidents which may result from the improper use of products, it is important that correct procedures be followed. Products must be used in accordance with the engineering information specified in the catalog. Proper installation, maintenance and operation procedures must be observed. The instructions in the instruction manuals must be followed. Inspections should be made as necessary to assure safe operation under prevailing conditions. This unit and its associated equipment must be installed, adjusted and maintained by qualified personnel who are familiar with the construction and operation of all equipment in the system and the potential hazards involved. When risks to persons or property may be involved, a holding device must be an integral part of the driven equipment beyond the speed reducer output shaft.

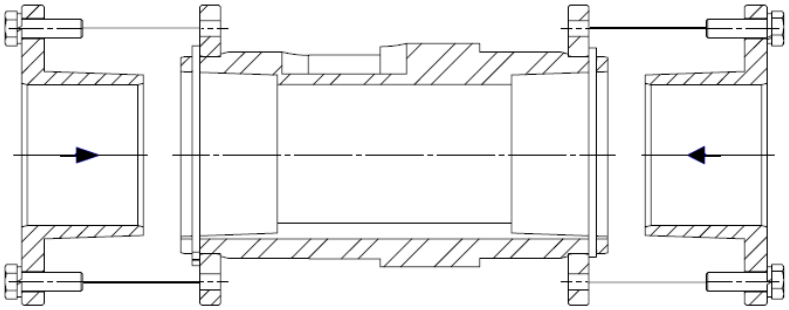

1. One bushing assembly is required to mount the reducer on the driven shaft. An assembly consists of two tapered bushings, bushing screws and washers, two bush locking plates and retaining rings, and necessary shaft key or keys. The driven shaft must extend through the full length of the reducer. The minimum shaft length, as measured from the end of the shaft to the outer edge of the bushing flange (see Figure 1), is given in Table 1 and shown in Figure 1.

Table 1 – Minimum Mounting Dimensions and Bolt Torque

Gearbox size	minimum shaft length	Fastener size	Torque (Nm)	A (Minimum clearance for removal) in mm
SMSR E Plus TBD		M8	22-26	
SMSR F Plus TBD		M8	22-26	
SMSR G Plus TBD	263	M10	24-29	64
SMSR H Plus TBD	301	M12	33-40	67
SMSR J Plus TBD	316	M12	42-48	67

2. Install one bushing backup plate on the end of the hub and secure with the supplied retaining ring. Repeat procedure for other side.
3. Place one bushing, flange end first, onto the driven shaft and position per dimension "A", as shown in Table 1. This will allow the bolts to be threaded into the bushing for future bushing and removal.
4. Insert the output key in the shaft and bushing. For ease of installation, rotate the driven shaft so that the shaft keyseat is at the top position.
5. Mount the reducer on the driven shaft and align the shaft key with the reducer hub keyway. Maintain the recommended minimum distance "A" from the shaft bearing.
6. Insert the screws, with washers installed, in the unthreaded holes in the bushing flange and align with the threaded holes in the bush locking plate. If necessary, rotate the bush locking plate to align with the bushing screws. Tighten the screws lightly. If the reducer must be positioned closer than dimension "A", place the screws with washers installed, in the unthreaded holes in the bushing before positioning gearbox making sure to maintain at least 3mm between the screw heads and the bearing.
7. Place the second tapered bushing in position on the shaft and align the bushing keyway with the shaft key. Align the unthreaded holes in the bushing with the threaded holes in the bush locking plate. If necessary, rotate the bush locking plate to align with the bushing holes. Insert bushing screws, with washers installed in the unthreaded holes in the bushing. Tighten screws lightly.
8. Alternately and evenly tighten the screws in the bushing nearest the equipment to the recommended torque given in Table 1. Repeat procedure on outer bushing.

Bushing Removal for Standard Taper or Short Shaft Bushings:

1. Remove bushing screws.
2. Place the screws in the threaded holes provided in the bushing flanges. Tighten the screws alternately and evenly until the bushings are free on the shaft. For ease of tightening screws make sure screw threads and thread holes in the bushing flanges are clean. If the reducer was positioned closer than the recommended minimum distance "A" as shown in Table 1, loosen the inboard bushing screws until they are clear of the bushing flange by 3mm. Locate two (2) wedges at 180 degrees between the bushing flange and the bushing backup plate. Drive the wedges alternately and evenly until the bushing is free on the shaft.
3. Remove the outside bushing, gearbox, and then the inboard bushing.

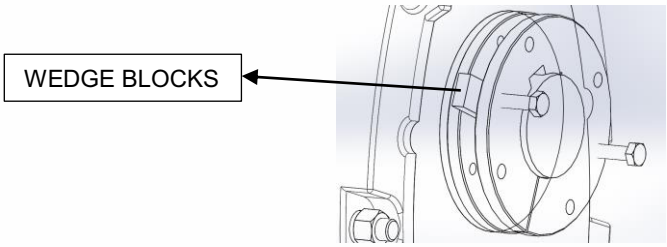

JK Fenner

Notes

JK Fenner

Notes

Corporate Office :
Khivraj Complex II, V Floor, 480, Anna Salai,
Nandanam, Chennai-600 035.
Tel : +91 44 4399 4666
Email : filmdu@jkfenner.com
www.jkfenner.com

Registered Office :
3, Madurai - Melakkal Road,
Kochadai, Madurai - 625 016.
Tel : 0452-2383801, 2383802

JK Fenner

BRANCHES:

Ahmedabad: 602, Wall Street Annx., Near Gujarat College Railway Crossing, Ellis Bridge, Ahmedabad - 380006. Ph: 079-26408573 / 26408572.

Bangalore: No. 109, 1st Floor, Brigade Rubix, Plot No.5, H.M.T. Main Road, Opp BFW, Bangalore - 560 013. Ph: 080-26756333,

Indore: 58, New Dewas Road, Vallabh Nagar, Above SBI Branch, Malwa Mill Square, Indore - 452 003. Ph: 0731 4205048 / 4285048, 9981507191.

Jaipur: 511, Neelkanth Tower, C Scheme, Opposite Sahkar Bhawan, Jaipur - 302001. Ph: +91-141-2220410, 4160510. Mob: 9799394727.

Kanpur: 1st Floor, 13/391, Civil Lines, Kanpur-208001. U.P. Mob: 09793999997

Kochi: 48/559, B15, 3 rd Floor, Asthapan Arcade, Near Gold Souk Grande Mall, Service Road, NH-66, Vytilla, Kochi, Kerala - 682 019. Ph: 0484-6003888, 98950 71066.

Kolkata: Trinity.226/1 A J C Bose Road. 3rd Floor, Room No. 3D. Kolkata : 700 020

Ludhiana: Oberoi Towers, Building No. BXV/85, First Floor, G.T.Road, Miller Ganj, Ludhiana - 141 003. Ph: 0161-2410214.

Madurai: 117/6E, Madurai - Usilampatti Road, Meenakshipuram, Madurai - 625 016. Ph: 0452-2383920,

Navi Mumbai: 105, Gauri Complex, Sector-11, CBD-Belapur, Navi Mumbai-400 614. Ph: 022-27560985, 022-27580236,

New Delhi: 2nd Floor, Delite Theatre Building, Asaf Ali Road, New Delhi - 110002. Ph: 011-23243113, 23243153, 23243154,

Hyderabad: Plot No. 35, TIE (Technocrat Industrial Estate), Behind Andhra Bank, Balanagar, Hyderabad 500 037. Ph: 040-23071126-39.